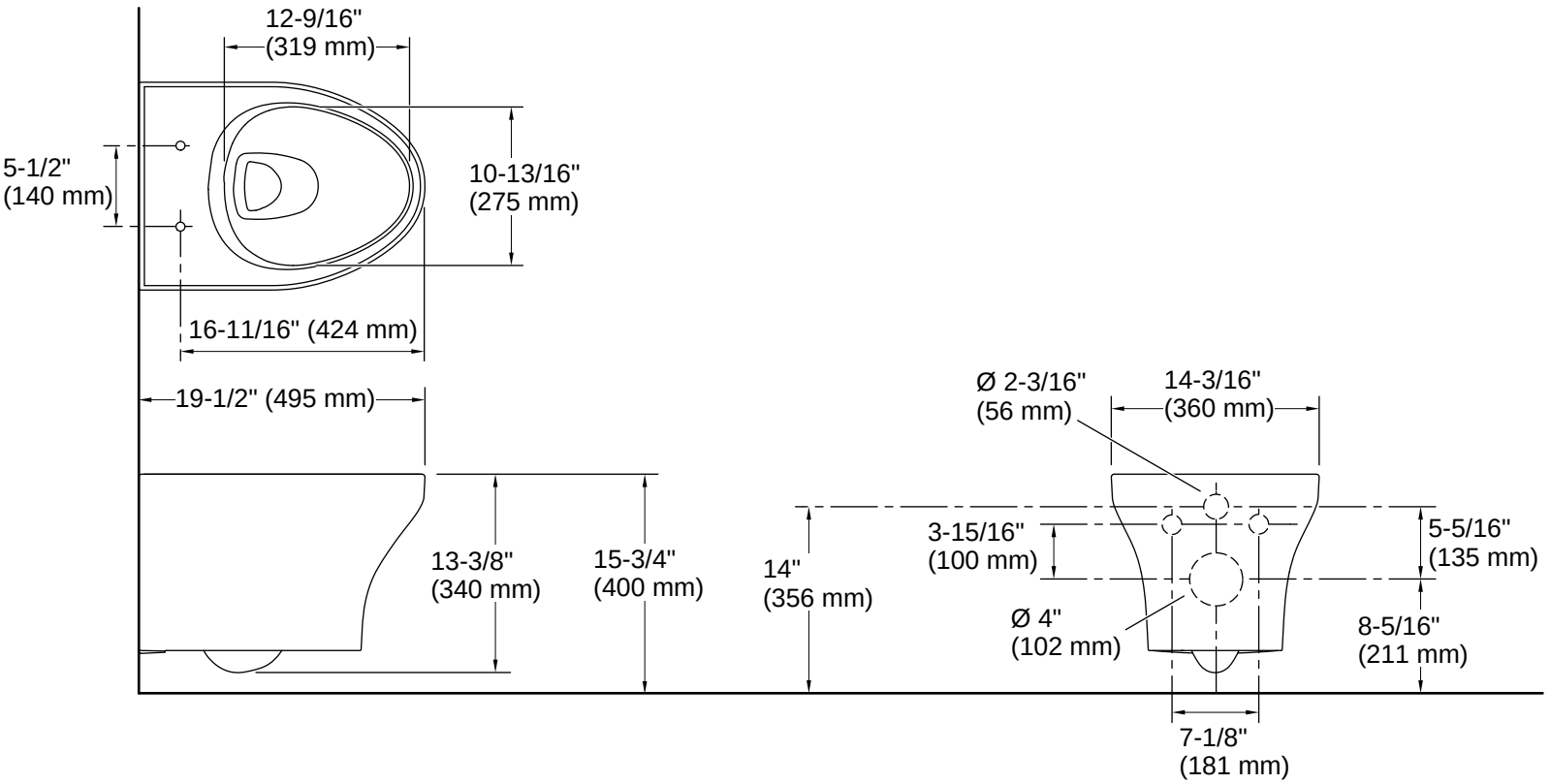

Kohler Co. reserves the right to make revisions without notice to product specifications.
For the most current Specification Sheet, go to kohler.com.cn.

科勒公司保留随时修改产品规格的权利，恕不另行通知。
如需查看最新的规格表，请访问 kohler.com.cn。

©2024 Kohler Co.